LaserShow

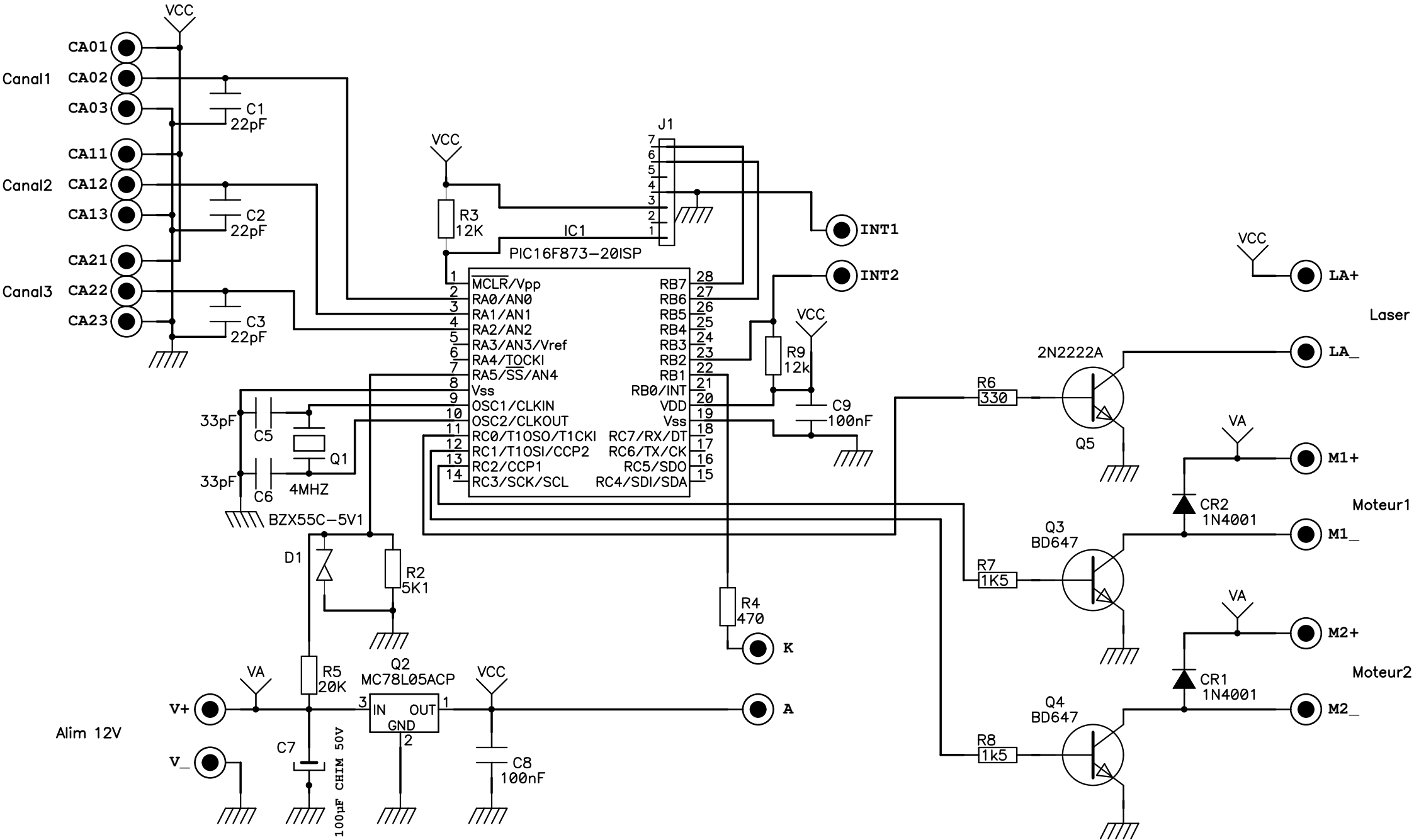
VCC
CA01
Canal1
CA02
CA03
C1
22pF
CA11
Canal2
CA12
CA13
C2
22pF
CA21
Canal3
CA22
CA23
C3
22pF
J1
IC1
PIC16F873-20ISP
R3
12K
INT1
INT2
MCLR/Vpp
RA0/AN0
RA1/AN1
RA2/AN2
RA3/AN3/Vref
RA4/TOCKI
RA5/SS/AN4
Vss
OSC1/CLKIN
OSC2/CLKOUT
RC0/T1OSO/T1CKI
RC1/T1OSI/CCP2
RC2/CCP1
RC3/SCK/SCL
RB7
RB6
RB5
RB4
RB3
RB2
RB1
RB0/INT
VDD
Vss
RC7/RX/DT
RC6/TX/CK
RC5/SDO
RC4/SDI/SDA
R9
12k
C9
100nF
33pF
C5
Q1
4MHZ
33pF
C6
BZX55C-5V1
D1
R2
5K1
R4
470
K
Q2
MC78L05ACP
IN
OUT
GND
R5
20K
VA
V+
Alim 12V
V_
C7
100µF CHIM 50V
C8
100nF
A
LA+
Laser
LA_
2N2222A
Q5
R6
330
M1+
Moteur1
M1_
CR2
1N4001
Q3
BD647
R7
1K5
M2+
Moteur2
M2_
CR1
1N4001
Q4
BD647
R8
1k5