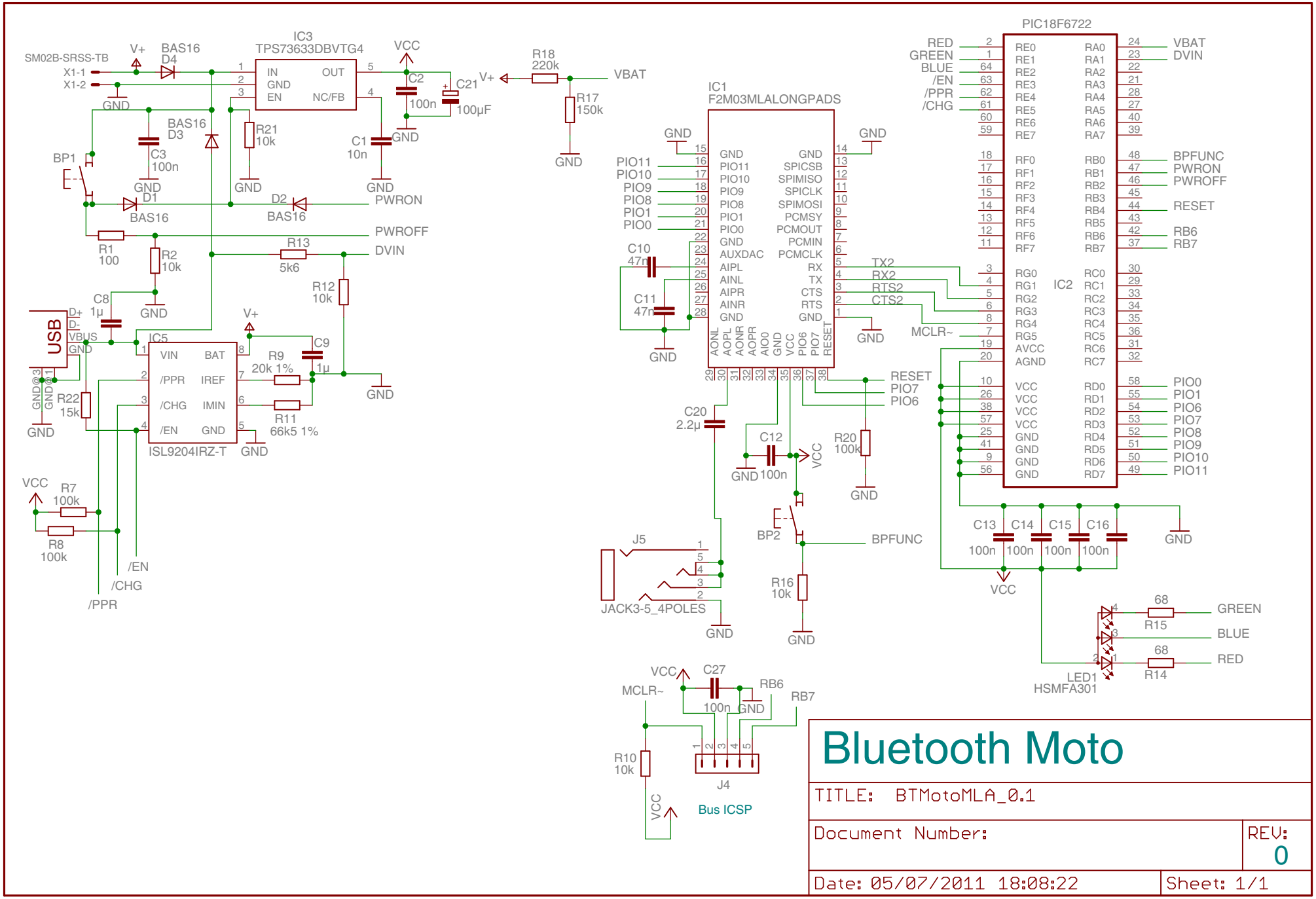

Bluetooth Moto

TITLE: BTMotoMLA_0.1

Document Number:

REV: 0

Date: 05/07/2011 18:08:22

Sheet: 1/1